IE9523

ARM EXTENSION

OWNER'S MANUAL

! CAUTION

Read all precautions
and instructions in this manual
before using this equipment

13S

! CAUTION
Read all precautions and instructions in this manual before using this equipment.

Table Of Contents

Important Safety Instructions---------- 3

Instructions---------- 4

Parts List---------- 5

Exploded View---------- 7

Measurement Guide---------- 8

Assembly Instructions---------- 9

Assembly---------- 10

Console Panel Function---------- 19

Exercise Instructions---------- 20

Maintenance Schedule---------- 21

General Maintenance Information---------- 22

Weight Training Tips---------- 23

Please assemble according to the actual **Weights and Console** you buy !

Important Safety Instructions

Before beginning any fitness program, you should obtain a complete physical examination from your physician. When using exercise equipment, basic precautions should always be taken, including the following:

* Read all instructions before using the equipment. These instructions are written to ensure your safety and to protect the unit.
* Do not allow children on or near the equipment.
* Use the equipment only for its intended purpose as described in this guide. Do not use accessory attachments that are not recommended by the manufacturer: such attachments might cause injuries.
* Wear proper exercise clothing and shoes for your workout----no loose clothing.
* Be careful when getting on or off the equipment.
* Do not overexert yourself or work to exhaustion.
* If you feel any pain or abnormal symptoms, stop your workout immediately and consult your physician.
* Never operate the unit when it has been dropped or damaged.
* Never drop or insert anything into any opening in the equipment.
* Always check the unit and its cables before each use. Make sure that all fasteners and cables are secure and in good working condition.
* Frayed or worn cables can be dangerous and may cause injury. Periodically check these cables for any indication of wear.
* Keep hands, limbs, loose clothing and long hair well out of the way of moving parts.
* Do not attempt to lift more weight than you can control safely.
* Do not use the equipment outdoors.

PERSONAL SAFETY DURING ASSEMBLY

* Read each step in the assembly instructions and follow the steps in sequence. Do not skip ahead. If you skip ahead, you may learn later that you have to disassemble components and that you may have damaged the equipment.
* Assemble and operate the equipment on a solid, level surface. Locate the unit a few feet from walls or furniture to provide easy access. The equipment is designed for your enjoyment. By following these precautions and using common sense, you will have many safe and pleasurable hours of healthful exercise with the equipment.

Instructions

Before beginning assembly please take the time to read instructions thoroughly. Please use the various lists in this manual to make sure that all parts have been included in your shipment. When ordering, use part number and description from the lists. Use only our replacement part when servicing. Failure to do so will void your warranty and could result in personal injury.

The equipment is designed to provide the smoothest, most effective exercise motion possible. After assembly, you should check all functions to ensure correct operation. If you experience problems, first recheck the assembly instructions to locate any possible errors made during assembly. If you are unable to correct the problem, call your authorized dealer. Be sure to have your serial number and this manual when calling. When all parts have been accounted for, continue on.

Tools Required

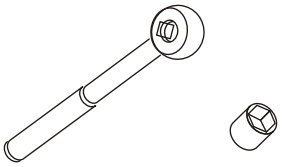

Ratchet Wrench and Socket

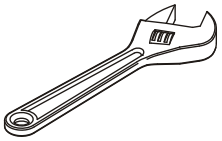

Adjustable Wrench

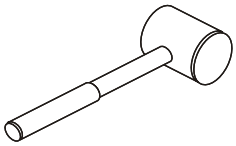

Rubber Mallet

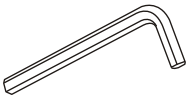

Hex Key Wrench Set

Parts List

NOTE: SOME OF THESE PARTS MAY COME PRE-INSTALLED.

ITEM NO.	Description	QTY	ITEM NO.	Description	QTY
1	Weight Stack Frame	1	37	Guide Rod Φ19*1177	2
2	Bottom Cross Brace	1	41	Bearing Φ50.8*Φ25.4*15.9	4
3	Main Frame	1	42	Flange	2
4	Seat Pad Support	1	44	Yellow Grip	1
5	Hand Bracket	1	45	Aluminium Grip Cap	2
6	Arm Bracket	1	47	Bumper Φ32*Φ25.4*40	1
7	Cam Wheel Brackets	1	48	Seat Pad	1
8	Top Cross Brace	1	49	Arm Pad	1
9	Main Bracket	1	50	Plastic Tube Guide	2
10	Adj. Handle	1	51	Spring	1
11	Pin	1	53	Big Aluminous Cap Φ60*Φ10.5*10	1
12	Main Shaft Φ25.4*335.4	1	54	Bushing	2
14	Scaleboard	1	57	Little Bumper Φ17*10.5	2
15	Adjustable Support	1	58	Bushing Φ16*8	2
16	Aluminium Cap Φ50*Φ10.5*8	2	59	Plate	2
17	Underlaying Flat Steel	1	65	Hex Head Bolt M12*35	4
18	Press Cable	1	66	Hex Head Bolt M10*55	1
19	Top Plate	1	67	Hex Head Bolt M10*135	2
20	Counter Poise Block	1	68	Hex Head Bolt M10*130	2
21	Rubber Plug Φ29*Φ19*10	2	69	Hex Head Bolt M10*100	2
24	Selector Pin W/Coil	1	70	Hex Head Bolt M10*80	2
26	Button Φ8*Φ20*23	12	71	Hex Head Bolt M10*50	2
27	Weight Rubber Bumper	2	72	Hex Head Bolt M10*35	2
28	Adjustable Foot plate	4	73	Hex Head Bolt M10*30	6
29	Grip Φ22*Φ30*145	2	74	Hex Head Bolt M10*25	2
34	4.5" Pulley	2	75	Flat Head Cap Screw M10*30	5
36	Plug RT50*100	1	76	Hex Head Bolt M10*20	2

Parts List

NOTE: SOME OF THESE PARTS MAY COME PRE-INSTALLED.

ITEM NO.	Description	QTY	ITEM NO.	Description	QTY
77	Socket Head Cap Screw M8*60	1	109	Socket Set Screw M8*8	4
78	Button Head Cap Screw M8*55	1	110	Nut	2
79	Socket Head Cap Screw M8*30	1	113	Rear Shroud	1
80	Socket Head Cap Screw M8*20	2	114	Front Shroud	1
81	Button Head Cap Screw M6*12	2	116	Hex Head Bolt M8*30	2
82	Hex Nut M6	2	117	Spring Washer Φ8	2
83	Socket Head Cap Screw M5*25	2	120	Rivet Nut M8	2
85	Socket Head Cap Screw M4*15	1	131	Socket Set Screw M6*15	2
86	Adjustable Support Sleeve	1	132	Hex Head Bolt M12*70	3
87	Weight Stack Space	2	133	Screw M5*12	9
89	Flat Washer Φ13*Φ24*1.5	11	134	Rivet Nut M5	5
90	Flat Washer Φ11*Φ20*2	36	135	Shroud clip	12
91	Flat Washer Φ9*Φ16*1.6	6	136	Plastic Cover	1
92	Flat Washer Φ5.5*Φ12*1	4	137	4.5" Pulley for Sensor	1
93	Nylon lock Nut M5	2	138	Plate for sensor	1
94	Nylon lock Nut M8	4	139	Philips Screw M3*8	4
95	Nylon lock Nut M10	13	140	Sensor	2
96	Nylon lock Nut M12	4	141	Console PCB	1
98	Hex Key s=3	1	142	Cover for Magnetic Iron	1
99	Hex Key s=4	1	143	Magnetic Iron	4
100	Hex Key s=5	1	144	Screw ST2.9*9.5	2
101	Hex Key s=6	1	145	Top Front Shroud	1
102	Flat Washer Φ9*Φ22*1.6	2	146	Front Support	1
104	Wrench	1	147	Top Cover	1
105	Lube	1	148	Left Plug	1
106	Location ring	1	149	Right Plug	1
107	Locking ring	1			

Exploded View

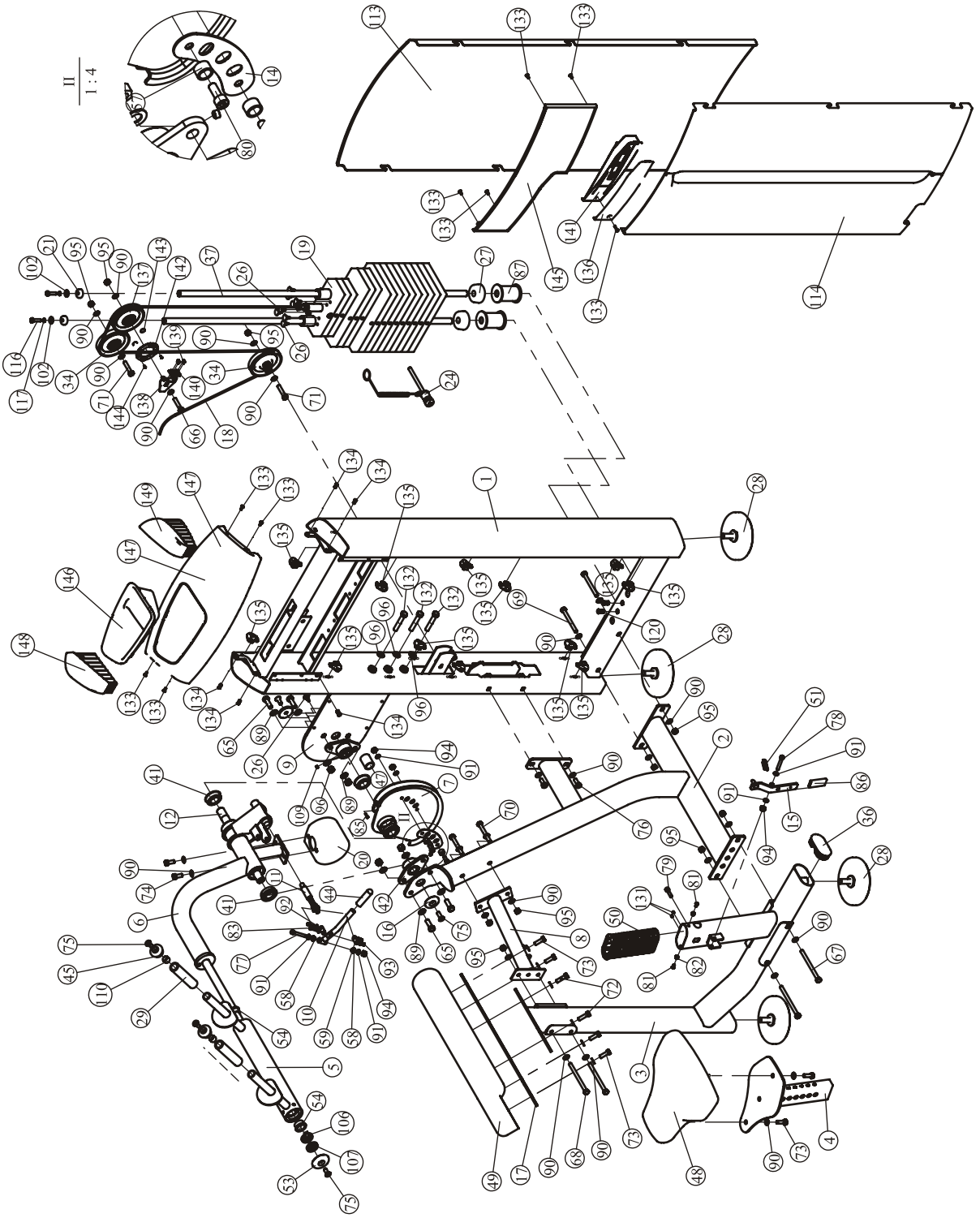

Measurement Guide

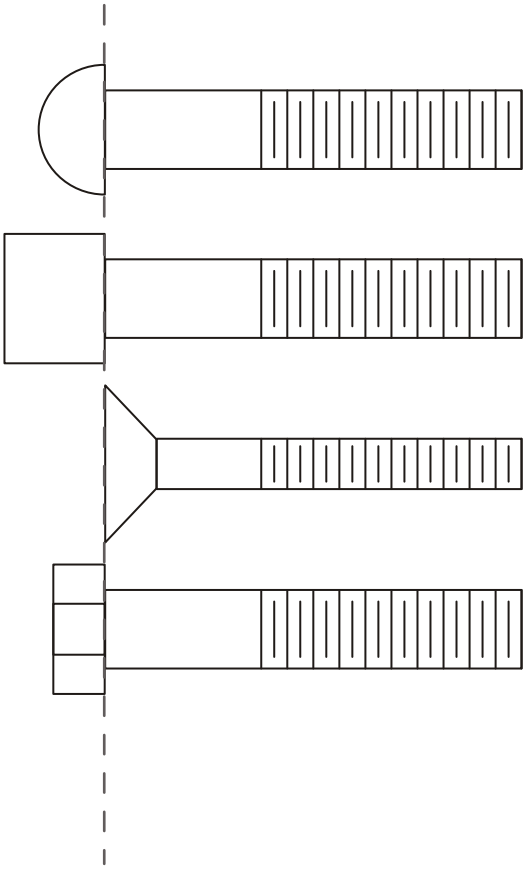

BHCS = Button Head Cap Screw

SHCS = Socket Head Cap Screw

FHCS = Flat Head Cap Screw

HHB = Hex Head Bolt

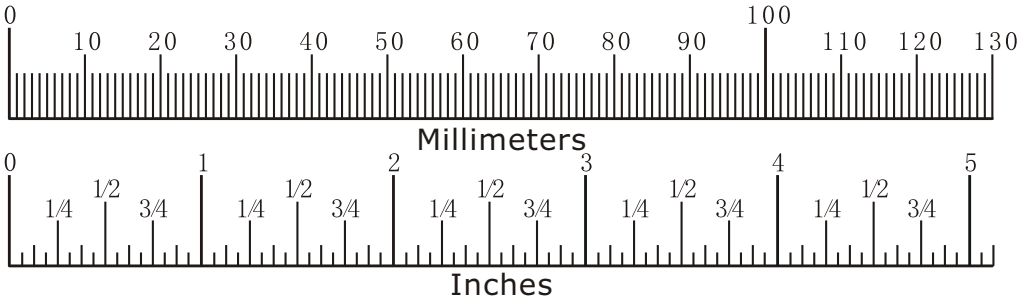

Assembly Instructions

Assembly of the equipment takes professional installers about 2 hours. If this is the first time you have assembled this type of equipment, plan to spend more time. It is strongly recommended to assemble the equipment by professional installers. You may find it quicker, safer, easier to assemble this equipment with the help of a friend, as some of components may be large, heavy or awkward to handle alone. It is important that you assemble your product in a clean, clear, uncluttered area. This will enable you to move around the product while you are fitting components and reduce the possibility of injury during assembly.

⚠ NOTE

As with any assembled part, proper alignment and adjustment is critical. While tightening the fasteners, be sure to leave room for adjustments. Do not fully tighten the fasteners until instructed to do so. Be careful to assemble the components in the sequence presented in this guide.

STEP 1

1. Attach two Adjustable Foot plate (#28) to the Main Frame (#3).
2. Attach the Bottom Cross Brace (#2) to the Main Frame (#3) using:
   - two M10*135 HHB (#67)
   - four Φ11*Φ20*2 Flat Washers (#90)
   - two M10 Nylon lock Nuts (#95)
3. Attach the Top Cross Brace (#8) to the Main Frame (#3) using:
   - two M10*130 HHB (#68)
   - four Φ11*Φ20*2 Flat Washers (#90)
   - two M10 Nylon lock Nuts (#95)
4. Attach the Bottom Cross Brace (#2) to the Top Cross Brace (#8) using:
   - two M10*80 HHB (#70)
   - four Φ11*Φ20*2 Flat Washers (#90)
   - two M10 Nylon lock Nuts (#95)

Note: Hand tighten Bolts and Nylon Lock nuts.

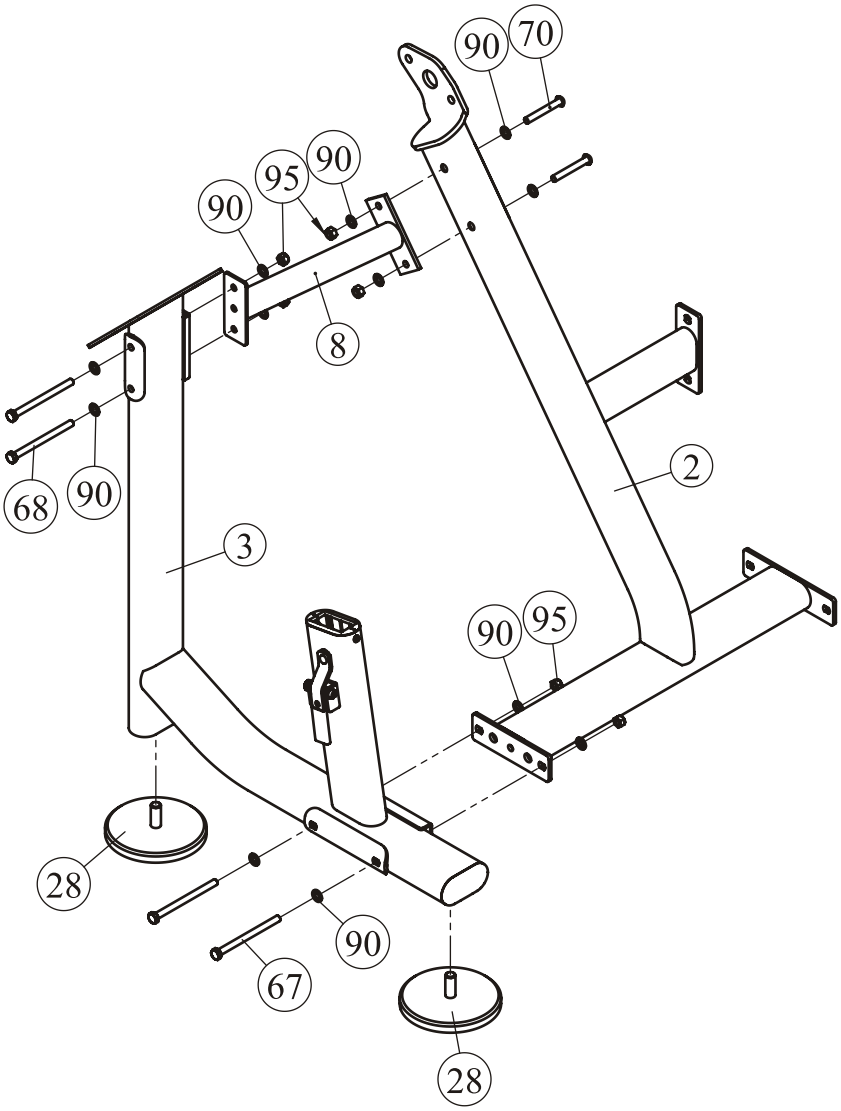

STEP 2

1. Attach two Adjustable Foot Plate (#28) to the Weight Stack Frame (#1).
2. Attach the Main Bracket (#9) to the Weight Stack Frame (#1) using:
   - three Φ13*Φ24*1.5 Flat Washers (#89)
   - three M12*70 HHB (#132)
3. Attach one Flange (#42) to the Bottom Cross Brace (#2) using:
   - two M12*35 HHB (#65)
   - four Φ13*Φ24*1.5 Flat Washers (#89)
   - two M12*70 HHB (#132)
4. Attach another Flange (#42) to the Main Bracket (#9) using:
   - two M12*35 HHB (#65)
   - four Φ13*Φ24*1.5 Flat Washers (#89)
   - two M12 Nylon lock Nuts (#96)
5. Attach the Arm Bracket (#6) and the Cam Wheel Brackets (#7) to the two Flanges (#42) using:
   - two M10*30 Flat Head Cap Screws (#75)
   - two Φ50*Φ10.5*8 Aluminous Caps (#16)
   - one Φ25.4*335.4 Main Shaft (#12)
   - four M8*8 Socket Set Screws (#109)
6. Attach Bottom Cross Brace (#2) to the Weight Stack Frame (#1) using:
   - two M10*100 HHB (#69)
   - two M10*75 HHB (#76)
   - four M10 Nylon lock Nuts (#95)
   - eight Φ11*Φ20*2 Flat Washers (#90)

Note: Wrench Tighten Bolts and Nylon Lock nuts.

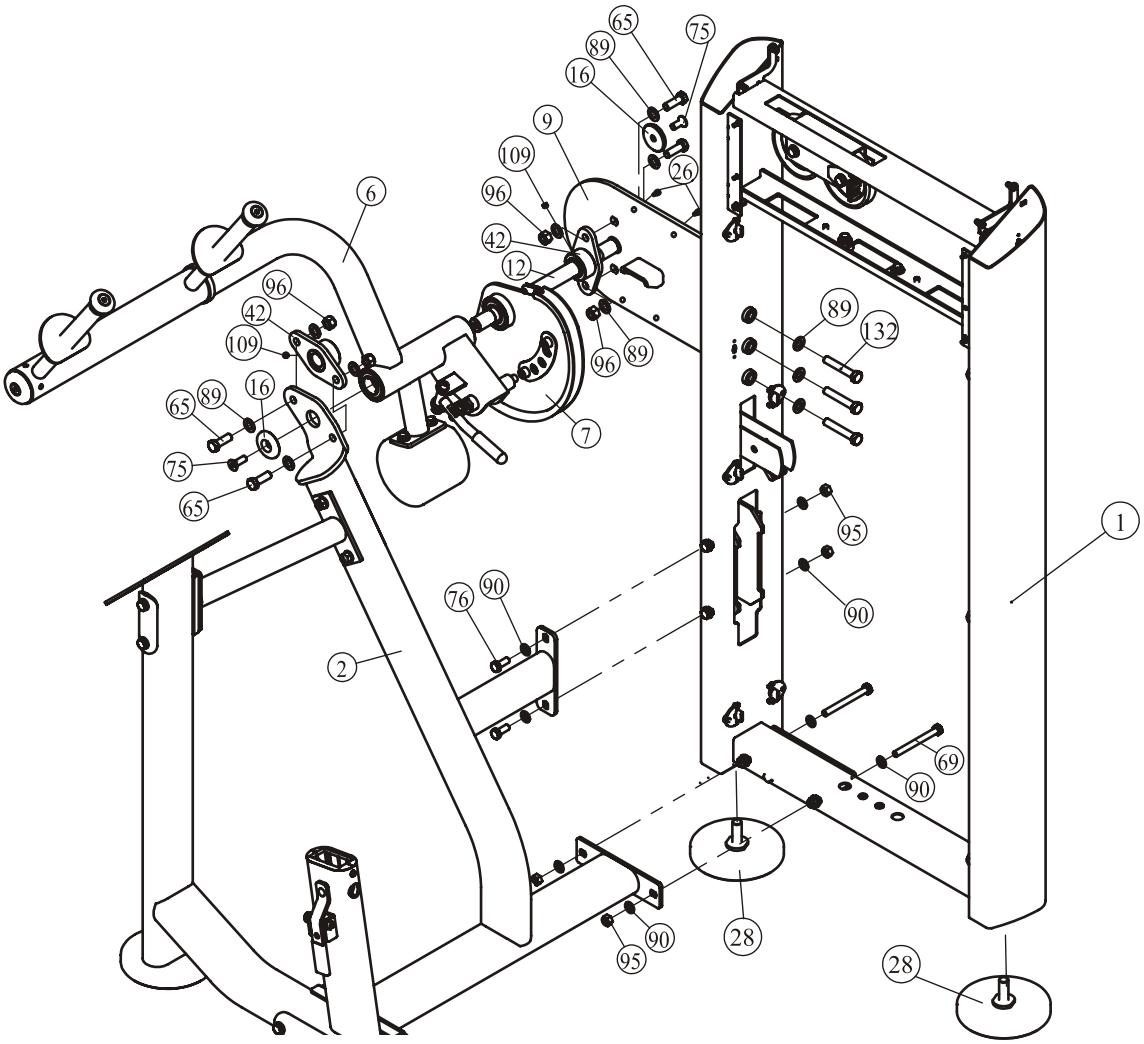

STEP 3

1. Attach:

- two Φ19*1177 Guide Rods (#37)
- two Weight Stack Spaces (#87)
- three Weight Plate 10LBS (#123)
- one Top Plate (#19)
- two Φ63.5*Φ19*25.4 Weight Rubber Bumper (#27)
- five Weight Plate 15LBS (#124)
- seven Weight Plate 5LBS (#122)

to the Weight Stack Frame (#1) using:

- two M8*30 HHB (#116)
- two Φ9*Φ22*1.6 Flat Washers (#102)
- two Φ8 Spring Washers (#117)
- two Φ29*Φ19*10 Rubber Plugs (#21)

2. Attach the Selector Pin W/Coil (#24) to the Top Plate (#19).
3. Attach eight Φ8*Φ20*23 Buttons (#26) to the Top Plate (#19).

Note: Wrench Tighten Bolts and Nylon Lock nuts.

Here is the assembly instruction for **150LBS Weights !**

150LBS Weight

Item	Description	Qty
122	Weight Plate 5LBS	7
123	Weight Plate 10LBS	3
124	Weight Plate 15LBS	5

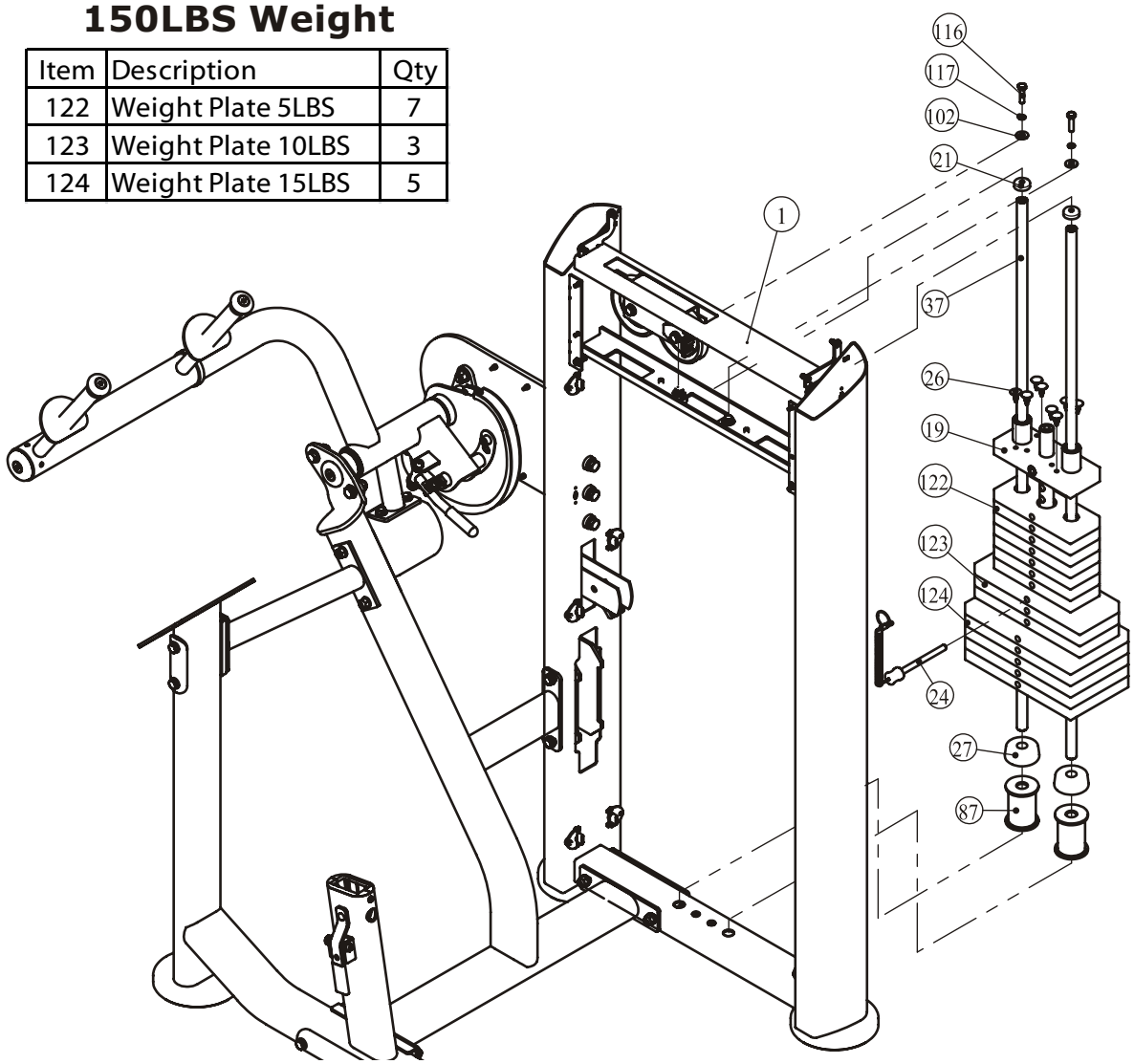

STEP 3

1. Attach:

- two Φ19*1177 Guide Rods (#37)
- two Weight Stack Spaces (#87)
- three Weight Plate 10LBS (#123)
- one Top Plate (#19)
- two Φ63.5*Φ19*25.4 Weight Rubber Bumper (#27)
- ten Weight Plate 15LBS (#124)
- two Weight Plate 5LBS (#122)

to the Weight Stack Frame (#1) using:

- two M8*30 HHB (#116)
- two Φ9*Φ22*1.6 Flat Washers (#102)
- two Φ8 Spring Washers (#117)
- two Φ29*Φ19*10 Rubber Plugs (#21)

2. Attach the Selector Pin W/Coil (#24) to the Top Plate (#19).

3. Attach eight Φ8*Φ20*23 Buttons (#26) to the Top Plate (#19).

Note: Wrench Tighten Bolts and Nylon Lock nuts.

Here is the assembly instruction for **200LBS Weights !**

200LBS Weight

Item	Description	Qty
122	Weight Plate 5LBS	2
123	Weight Plate 10LBS	3
124	Weight Plate 15LBS	10

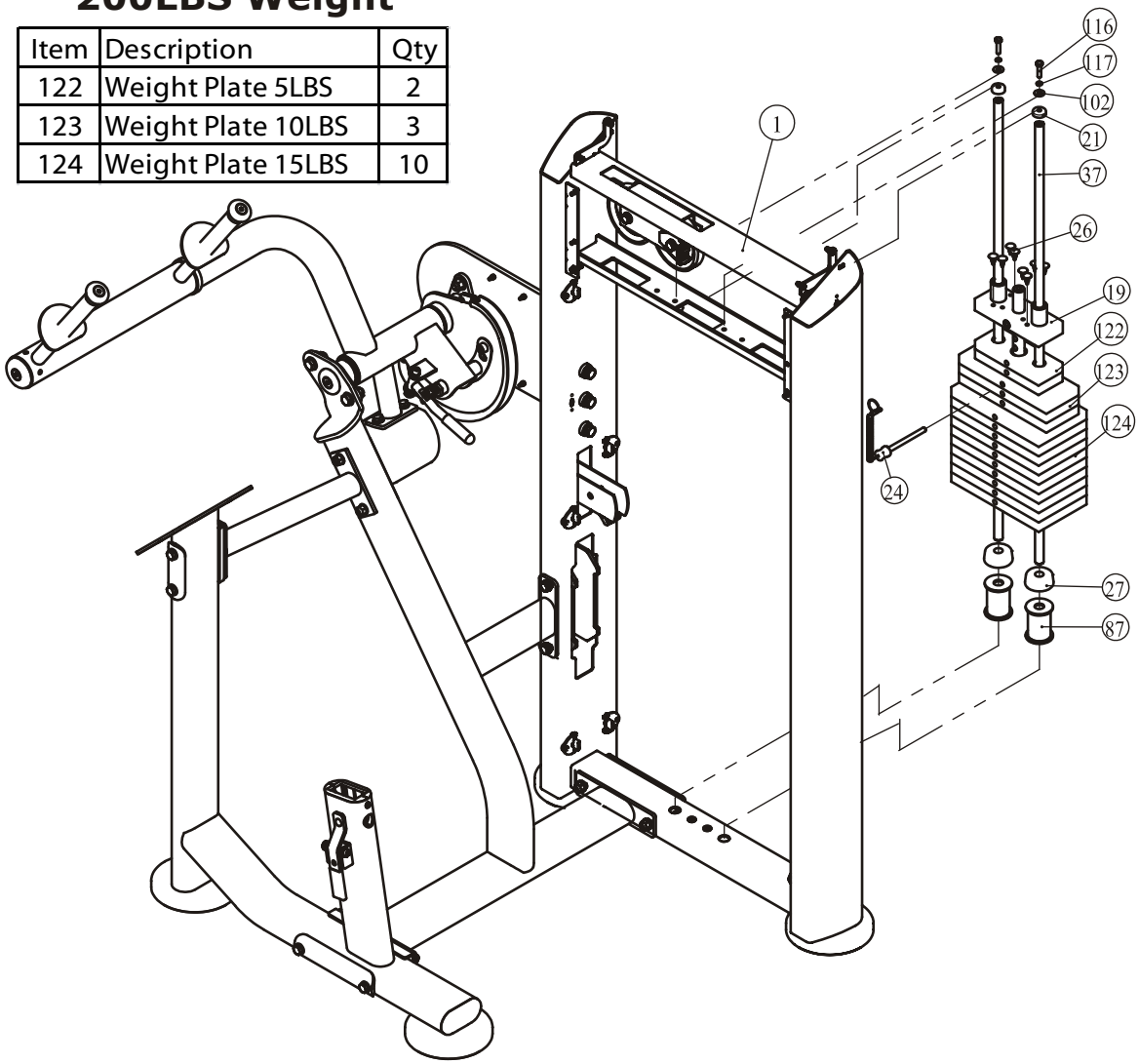

STEP 4

1. Attach the Press Cable (#18) to the Top Plate (#19) and go through two 4.5" Pulleys.
2. Attach one 4.5" Pulleys (#34) to the Weight Stack Frame (#1) using:
   - one M10*50 HHB (#71)
   - two Φ11*Φ20*2 Flat Washers (#90)
   - one M10 Nylon lock Nuts (#95)
3. Attach the Press Cable (#18) to the Cam Wheel Brackets (#7) using:
   - one M4*15 SHCS (#85)

Note: Wrench Tighten Bolts and Nylon Lock nuts.

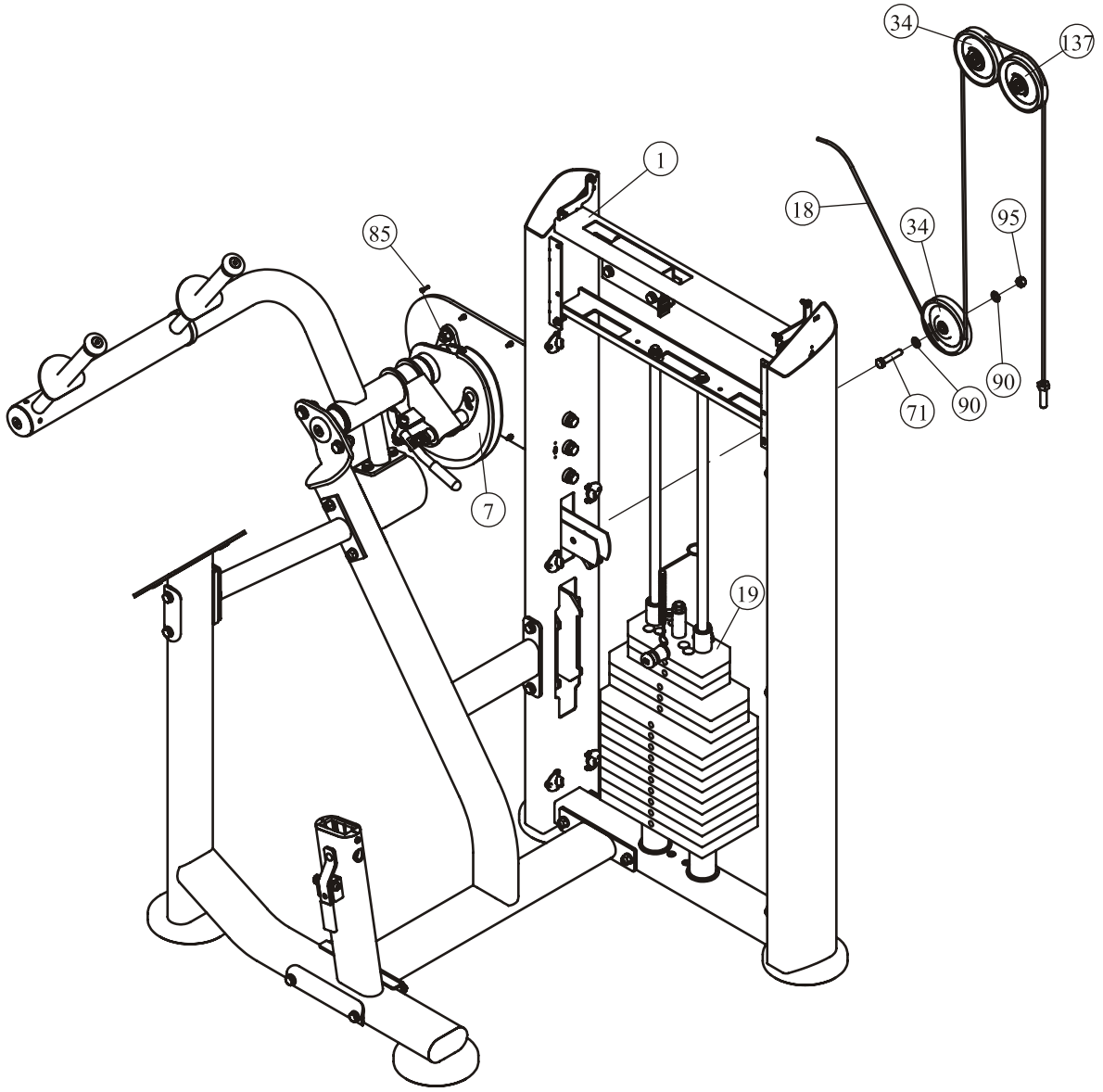

STEP 5

1. Attach one Front Shroud (#114) to the Weight Stack Frame (#1).
2. Attach one Rear Shroud (#113) to the Weight Stack Frame (#1).
3. Attach the Top Front Shroud (#145) and the Console PCB (#141) to the Weight Stack Frame (#1) using:
   - five M5*12 Screws (#133)
4. Attach the Top Cover (#147) to the Weight Stack Frame (#1) using:
   - four M5*12 Screws (#133)
5. Attach the Left Plug (#148) and Right Plug (#149) to the Weight Stack Frame (#1).

Note: Wrench Tighten Bolts and Nylon Lock nuts.

Here is the assembly instruction for **Console PCB !**

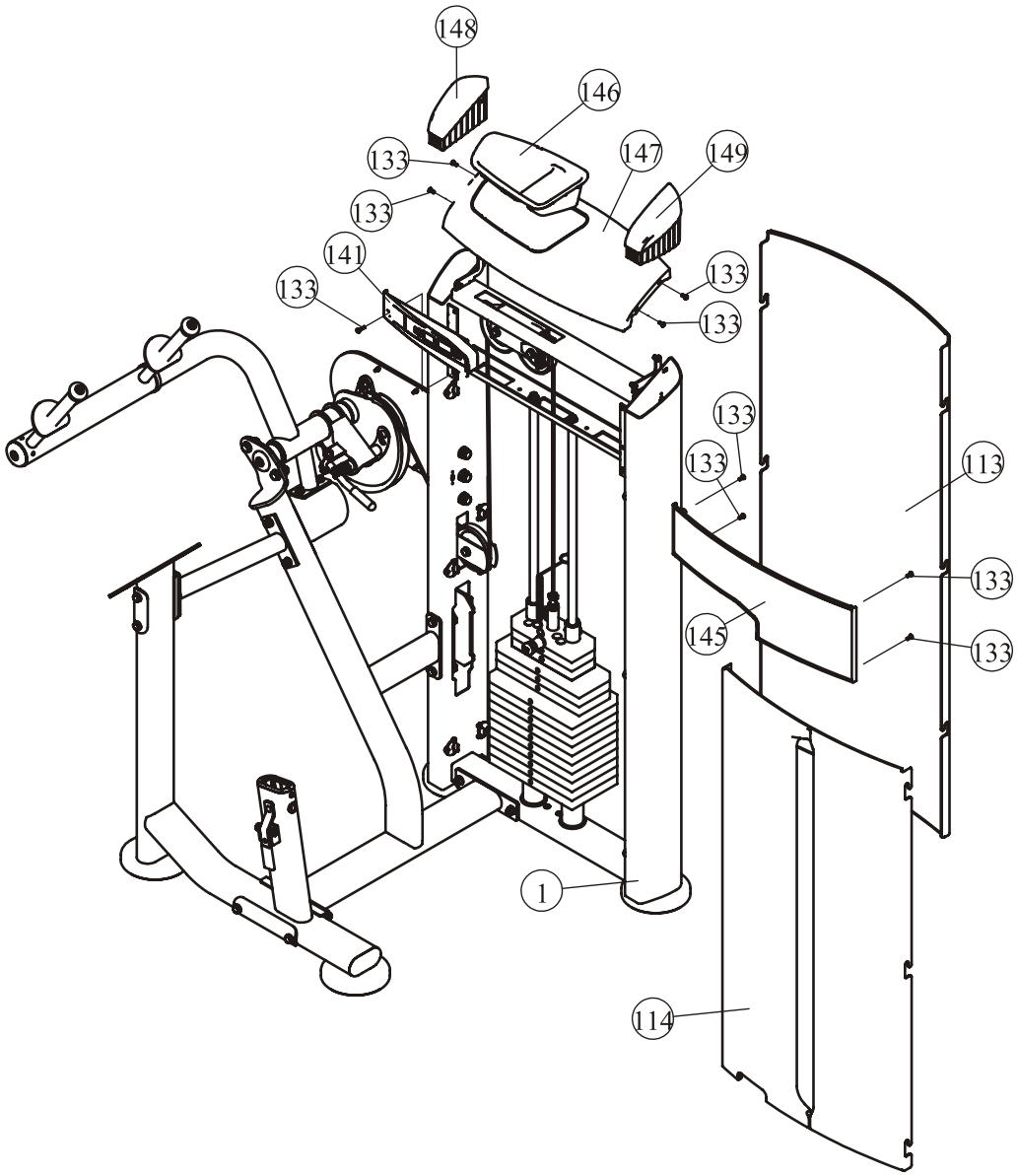

STEP 5

Here is the assembly instruction for **Console PCB !**

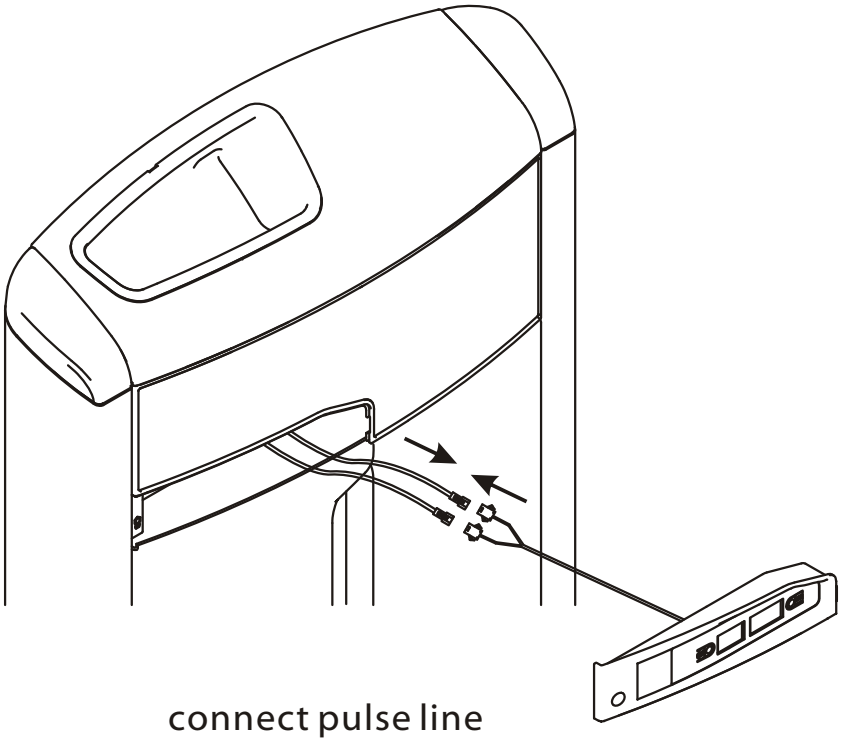

connect pulse line

STEP 5

1. Attach one Front Shroud (#114) to the Weight Stack Frame (#1).
2. Attach one Rear Shroud (#113) to the Weight Stack Frame (#1).
3. Attach the Top Front Shroud (#145) and Plastic Cover (#136) to the Weight Stack Frame (#1) using:
   - five M5*12 Screws (#133)
4. Attach the Top Cover (#147) to the Weight Stack Frame (#1) using:
   - four M5*12 Screws (#133)
5. Attach the Left Plug (#148) and Right Plug (#149) to the Weight Stack Frame (#1).

Note: Wrench Tighten Bolts and Nylon Lock nuts.

Here is the assembly instruction for **Plastic Cover !**

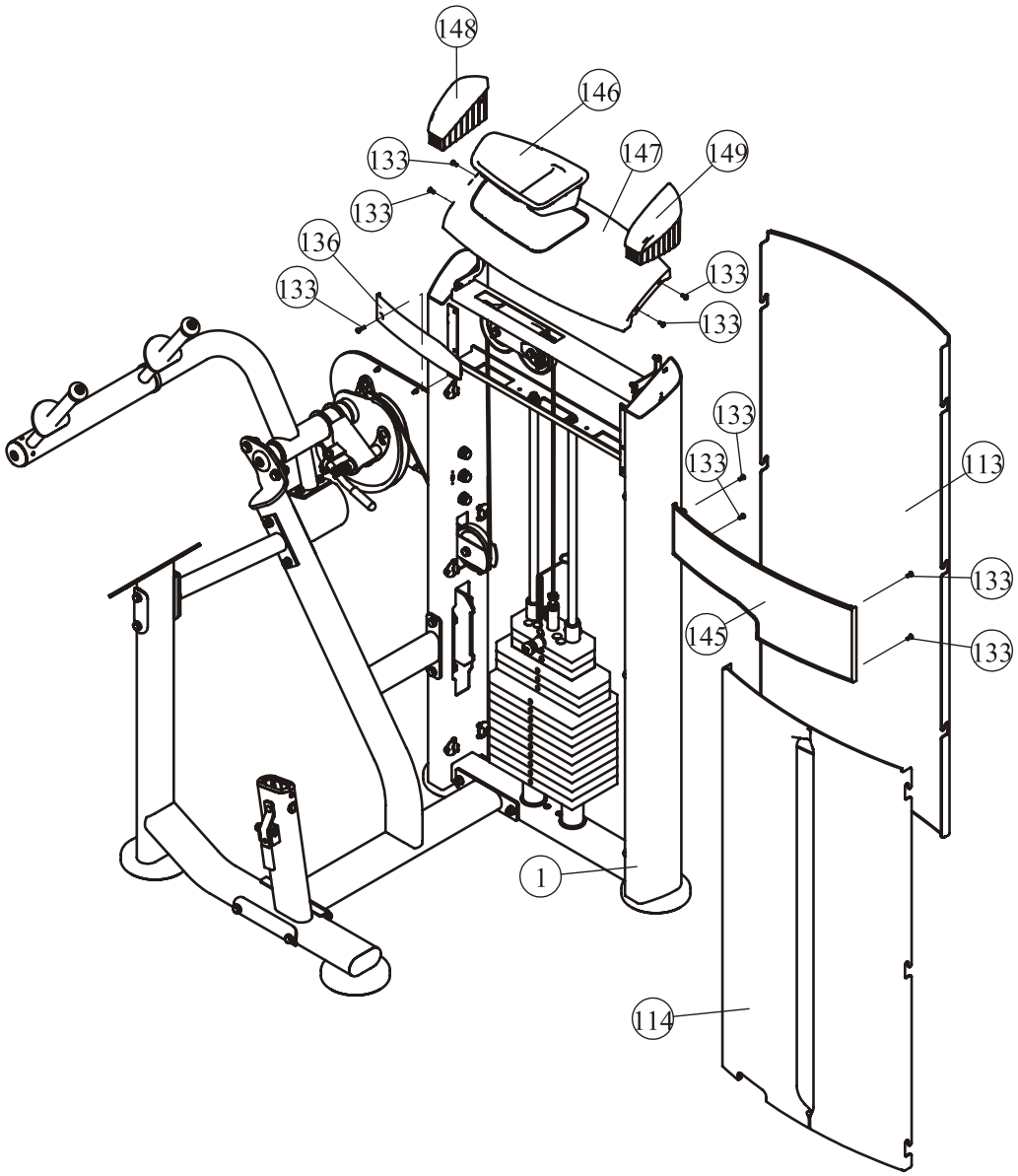

STEP 6

1. Attach the Seat Pad Support (#4) to the Main Frame (#3) using:
   - one M8*30 SHCS (#79)
2. Attach the Seat Pad (#48) to the Seat Pad Support (#4) using:
   - two M10*30 HHB (#73)
   - two Φ11*Φ20*2 Flat Washers (#90)
3. Attach the Arm Pad (#49) and the Underlaying Flat Steel (#17) to the Main Frame (#3) using:
   - four M10*30 HHB (#73)
   - two M10*35 HHB (#72)
   - six Φ11*Φ20*2 Flat Washers (#90)

Note: Wrench Tighten Bolts and Nylon Lock nuts.

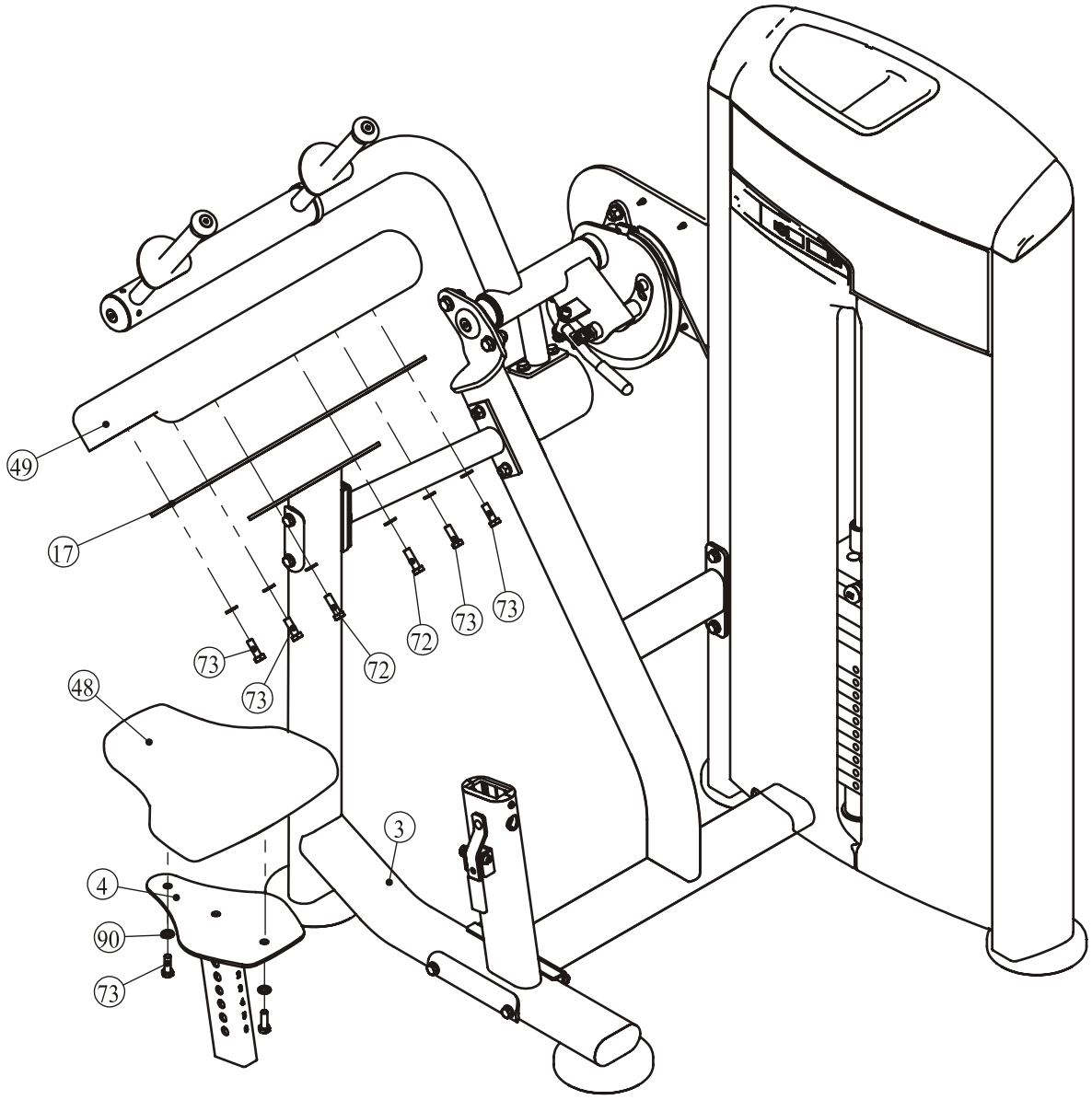

Console Panel Function

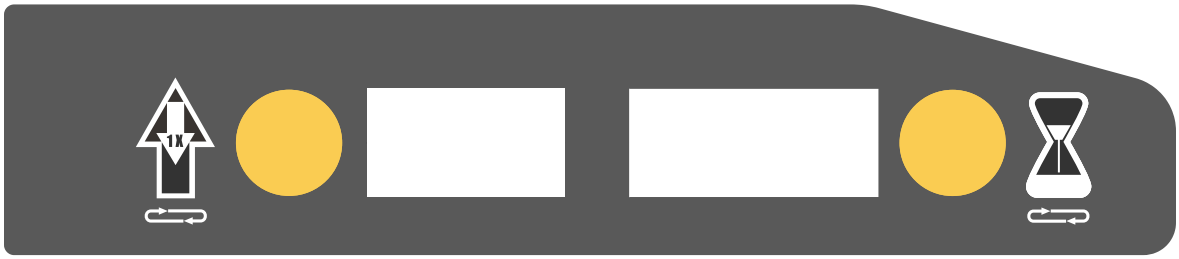

1. CONSOLE PANEL FUNCTION

1.1 TIME WINDOW

Indicates elapsed time after pressing start in minutes and seconds (0-99minutes, 0-59seconds).

1.2 COUNT WINDOW

Indicates times of workout cycle (0-999).

2. BUTTONS

2.1 COUNT RESET: Reset value of COUNT window.

2.2 TIME RESET: Reset value of TIME window

3. SAVE POWER MODE

3.1 Switched on automatically when there is signal input.

3.2 The screen turn off of self after 3 minutes in stop station.

Exercise Instructions

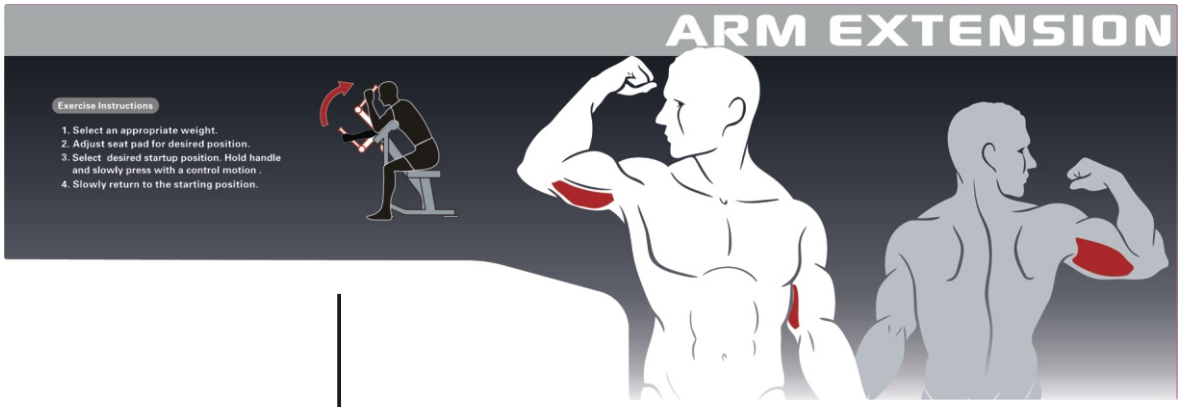

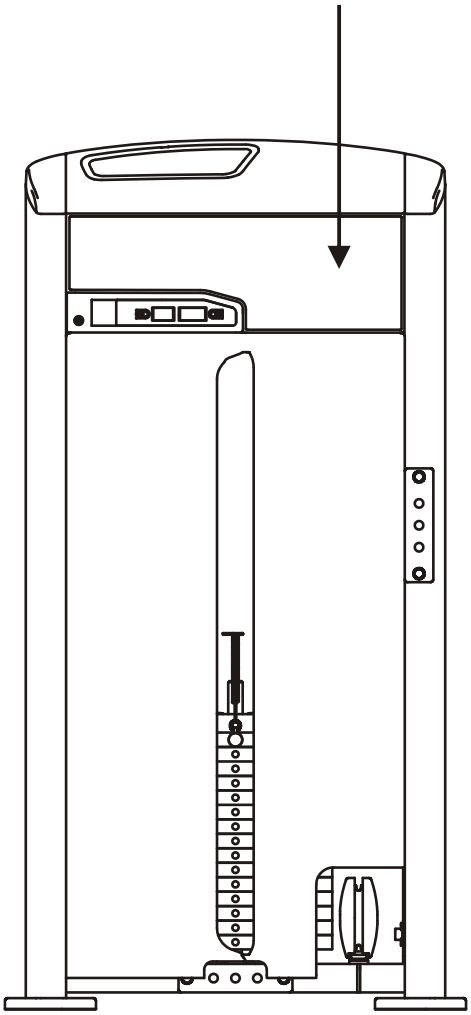

Exercise Instructions

1. Select an appropriate weight.
2. Adjust seat pad for desired position.
3. Select desired startup position. Hold handle and slowly press with a control motion.
4. Slowly return to the starting position.
   (Adjust weight according to the select pin)

Specifications

Class: S

Maximum Wt. Capacity: 91Kg/ 200lbs.

Maximum User Weight: 150Kg/ 330lbs.

Maintenance Schedule

ROUTINE	COMMERCIAL MAINTENANCE	HOME MAINTENANCE	LATEST DATE ENTRY						
Inspect; Links, Pull Pins, Snap Locks, Swivels, Weight Stack Pins	DAILY	WEEKLY							
Clean; Upholstery	DAILY	WEEKLY							
Inspect; Cables or Belts and their tension	DAILY	WEEKLY							
Inspect; Accessory Bars, and Handles	WEEKLY	3 MONTHS							
Inspect; All Decals	WEEKLY	3 MONTHS							
Inspect; All Nuts and Bolts, Tighten if needed	WEEKLY	3 MONTHS							
Inspect; Anti-Skid Surface	WEEKLY	3 MONTHS							
Clean & Lubricate; Guide Rods with a Teflon (PTFE) based lubricant (Superlube)	MONTHLY	3 MONTHS							
Lubricate; Seat Sleeves, Turcite Bushings, Linear Bearing	MONTHLY	3 MONTHS							
Clean and Wax; All Glossy Finishes	6 MONTHS	YEARLY							
Repack with Grease; Linear Bearings	6 MONTHS	YEARLY							
Replace; Cables, Belts and Connecting Parts	YEARLY	3 YEARS							

Your equipment comes with a commercial maintenance decal. For personal, in home use, please follow the home maintenance schedule listed above.

General Maintenance Information

Links, Pull-Pins, Snap Hooks, Swivels, Weight Stack Pins:
* Check all pieces for signs of visible wear or damage.
* Check springs in snap hooks and pull-pins for proper tension and alignment.
* If the spring sticks or has lost its rigidity, replace it immediately.

Upholstery:
* To ensure prolonged upholstery life and proper hygiene, all upholstered pads should be wiped down with a damp cloth after every workout.
* Periodically take the time to use a mild soap or an approved vinyl upholstery cleaner to deter the onset of cracking or drying. Avoid using any abrasive cleaners or cleaners not intended for use on vinyl.
* Replace ripped or warn upholstery immediately.
* Keep sharp or pointed objects clear of all upholstery.

Decals:
* Inspect and familiarize yourself with any safety warnings or other user information posted on each decal.

Nuts and Bolts:
* Inspect all nuts and bolts for any loosening and tighten if needed.
* Go through a re-tightening sequence periodically to ensure that all hardware is tensioned proper.

Anti-Skid Surfaces:
* These surfaces are designed to supply secure footing and need to be replaced if they appear worn or become slippery.

Belts and Cables:
* We uses only high quality belt, and mil-spec cables.
* Visually inspect the belts and cables for fraying, cracking, peeling or discoloration.
* While the machine is not in use, carefully run your fingers along the belt or cable to feel for thinning or bulging areas.
* Replace belts and cables immediately at the first signs of damage or wear. Do not use equipment until belts or cables have been replaced.

Belt and Cable Tension:
* Referring to the Owners Manual, when belts or cables are used check all bolts attachments to be sure they are properly attached.
* Check slack in cables and re-adjust cable tension if needed.

Seat Sleeves, Guide Rods:
* Wipe down adjusting tubes with a dust free rag before applying lubricant.
* Lubricate seat sleeves and Guide Rods with a Silicon or Teflon based lubricant spray.

Linear Bearings:
* Referring to the Owners Manual carefully disassemble the bearing from its housing and place a finger full of light grease (lithium, super lube, etc.) into the inside of the bearing. Using your finger, press the grease into the ball-bearings and their tracks. repeat until the ball-bearing tracks are full of grease. Insert the shaft back into the bearing and wipe off excess grease.

PLEASE KEEP THIS FOR YOUR RECORDS

Weight Training Tips

Use this manual to guide you through the basic exercises you can perform on your equipment. To gain maximum results and avoid possible injury, consult a fitness professional to develop your complete exercise program.

Always consult your physician before starting any exercise program.

To be successful in your exercise program, it is important to develop an understanding of the basic principles of strength training. Now that you have your equipment, it is only natural that you want to get started immediately. First, determine a set of realistic goals and objectives for yourself. By deciding on an exercise plan that is right for you prior to starting, you will contribute significantly to your success.

Warm up properly before engaging in weight resistance training. Stretching, yoga, jogging, calisthenics or other cardiovascular exercise can help prepare your body for the heavier workload of lifting weights.

Learn how to perform the exercise correctly before using heavy weight. Correct form is important to avoid injury and to ensure that you work the proper muscle groups.

Know your limitations. If you are new to weight training or are embarking on an exercise regimen after a long layoff, start slowly and build foundational strength over a longer period of time.

Pay attention to your breathing. Exhale when you exert is a general rule of thumb. Never hold your breath.

SYSTEM CERTIFICATION ISO 9001 SGS
SYSTEM CERTIFICATION ISO 14001 SGS
SYSTEM CERTIFICATION OHSAS 18001 SGS
SYSTEM CERTIFICATION ISO 10015 SGS